50Hz

ZENIT

water solutions

S SERIES

GRS
APS

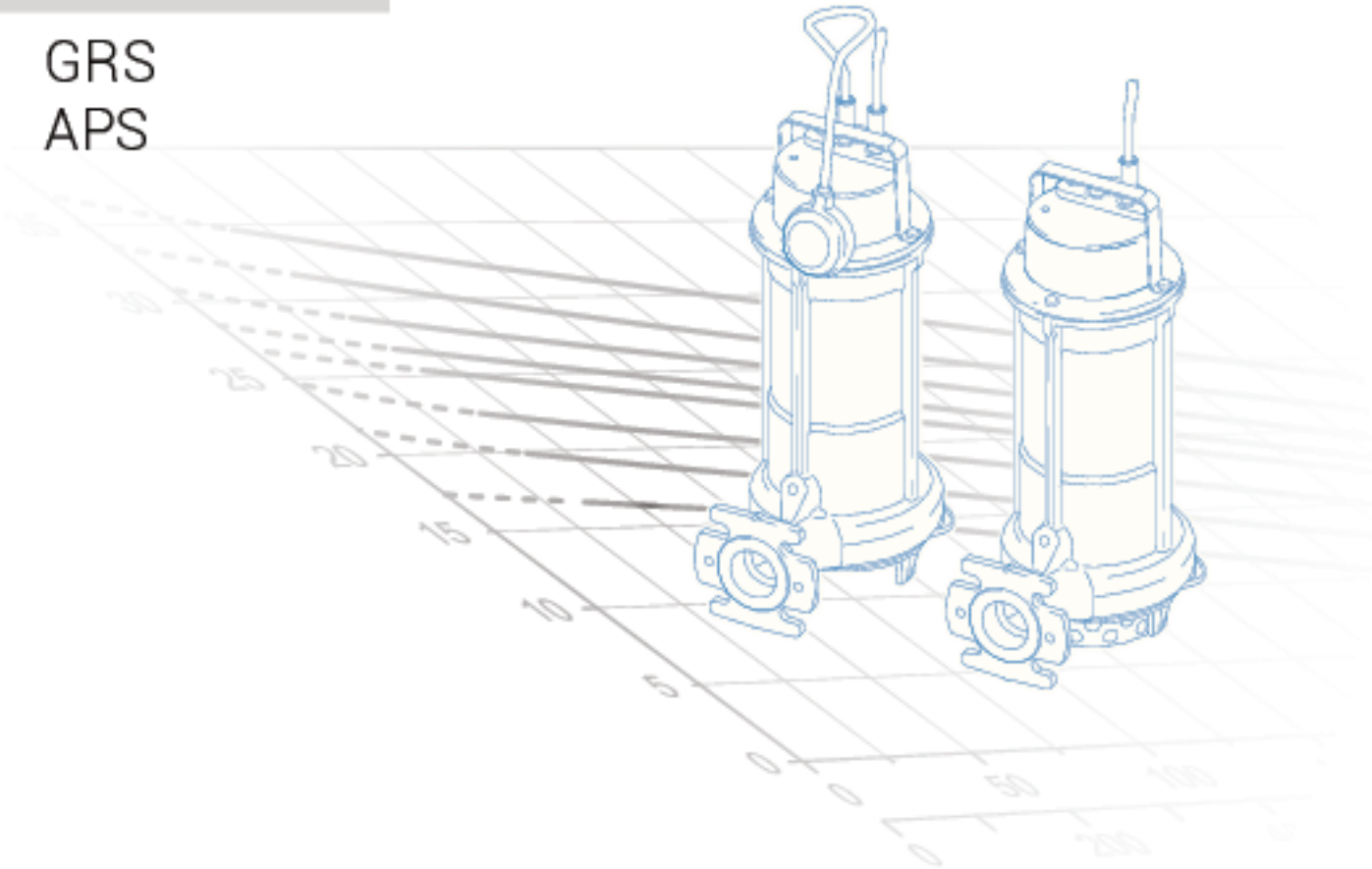

D A T A B O O K L E T

EN

water solutions

S SERIES

GRS
APS

50Hz

D A T A B O O K L E T

S Series

General characteristics

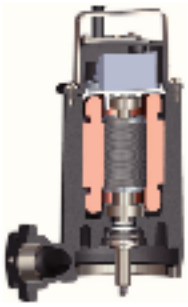

- AISI 304 stainless steel lifting and carrying handle
- Constructed in GJL-250 cast iron
- Ecological dry motor with thermal overloads
- Single-phase models with internal capacitor and control cabinet with circuit breaker capacitor and overload protection
- Three-phase models with motor protection relay
- One mechanical seal in silicon carbide (SiC) and one lip seal

Hydraulic families

GR (Grinder)

page 7

Impeller with grinder system
Suitable for lifting soiled wastewaters containing filaments or fibres, and unstrained household sewage in general

AP (Alta Prevalenza)

page 10

High head impeller
Used for clear wastewater, rainwater and seepage containing small amounts of sand. The considerable manometric head makes these units suitable for irrigation and the fish processing sector

Operating ranges

GRS

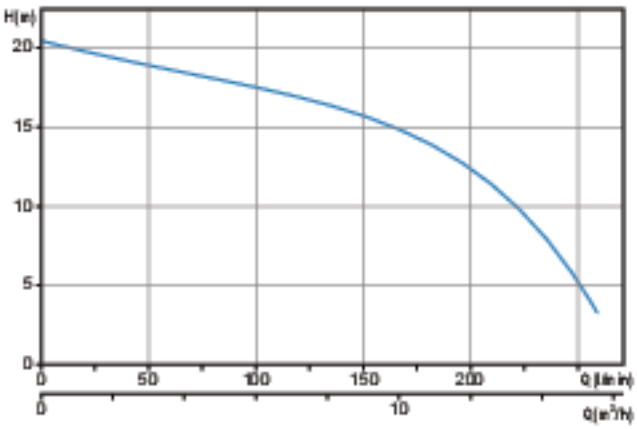

APS

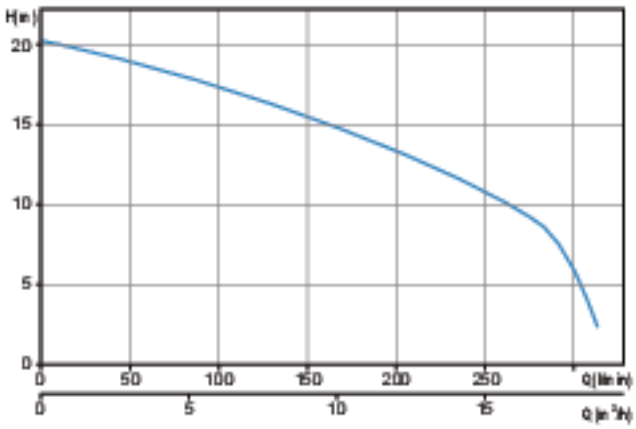

Versions available

• Electrical variants

Single-phase models

TCDT	Thermal protection, capacitor, startup capacitor, overload protection
TCDGT	Thermal protection, capacitor, startup capacitor, overload protection, float switch

Three-phase models

TR	Thermal protection, relais
TRG	Thermal protection, relais, float switch

• Cooling system

N	No cooling and/or seal flushing system

• Set of mechanical seals

SICM	1 mechanical seal in silicon carbide and 1 lip seal

Key to product code

GRS 100/2/G32V A0BM5

① ② ③ (A) (B) (C) ④ ⑤⑥⑦⑧⑨

① **Family**
② **Series**
③ **Power** (HPx100) / **motor poles**
④ **Delivery rate**
- (A) **TYPE** (GAS thread/Flanged)
- (B) **DIAMETER** (mm)
- (C) **POSITION**
  - V = vertical
  - H = horizontal

⑤ **Hydraulic model**
⑥ **Version number**
⑦ **Motor size**
⑧ **Motor phases**
- M = Single-phase
- T = Three-phase

⑨ **Power supply voltage frequency**
- 5 = 50Hz
- 6 = 60Hz

Installations

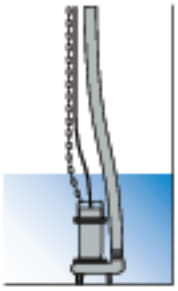

Free installation

The electric pump, standing on its feet or base, is connected to the delivery flexible pipe using a joint fixed to the discharge.
This installation allows to move easily the electrical pump

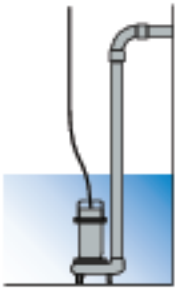

Fixed installation

The electric pump, standing on its feet or base, is connected to the delivery pipe, which is screwed to the discharge if threaded, or fixed to a bend if the port is flanged. The pump-hose connection may be threaded or flanged, depending on the pump fitting.

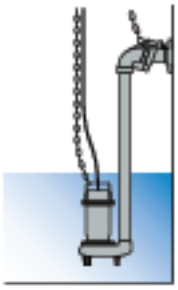

Installation with external coupler

Available for electric pumps with threaded discharge. The pump unit is supported by a special device fitted to the delivery pipe. This device can be installed at any time without having to empty the tank. It simplifies any maintenance work on the pump, which can be lifted out and resubmerged with great ease. It is recommended in particular for installations of small size, and does not require the pump to be resting on the bottom of the tank.

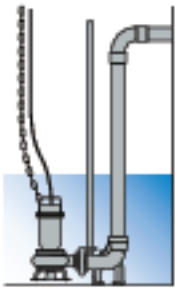

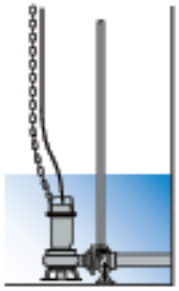

Installation with base coupling foot

For submerged installation, available for electric pumps with flange or threaded horizontal discharge. The coupling device is fixed to the bottom of the tank and the pump is lowered in with the aid of two guide pipes fitted earlier, until the connection to the foot is completed. The delivery pipe is fixed to the coupling device discharge. This device makes routine checks, any maintenance work or replacement of the pump extremely easy, with no need to empty the tank. A specific kit also allowing pumps with vertical discharge to be installed with the base coupling foot is available.

Pumps with vortex impeller

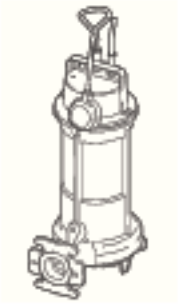

Operating ranges

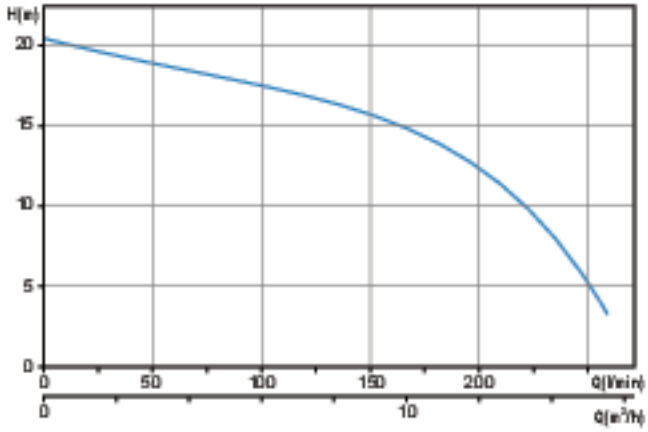

Range characteristics

Motor power	0.9 kW
Poles	2
Insulation class	F
Degree of protection	IP68
Discharge	GAS 1½" DN32 horizontal
Free passage	-
Max flow rate	4.3 l/s (258 l/min)
Max head	20.4 m

Motor

Dry motor with thermal protections.

Cable

H07RN-F 4G1 - 5 m cable length. Optional 10 m cable length.

Mechanical seals

One silicon carbide mechanical seal (SiC) and one lip seal (AL)

Applications

Suitable for lifting soiled wastewaters containing filaments or fibres, and unstrained household sewage in general.

Versions

Electrical variants	TCDT, TCDGT (single-phase models) TR, TRG (three-phase models)
Cooling system	N
Mechanical seals	SICM

Operating specifications

Max operating temperature	40 °C
PH of treated fluid	6 ÷ 14
Viscosity of treated fluid	1 mm²/s
Maximum immersion depth	20 m
Density of treated fluid	1 Kg/dm³
Acoustic pressure max	<70 dB
Max starts per hour	30

Construction materials

Case	Cast iron EN-GJL 250
Hydraulic parts	Cast iron EN-GJL 250
Impeller	Cast iron EN-GJL 250
Nuts and bolts	Stainless steel - Class A2-70
Standard gasket	Rubber - NBR
Shaft	Stainless steel - AISI 420
Grinding system	Chromium steel
Paint type	Ecological bicomponent epoxy (~ 80 µm)

Installations

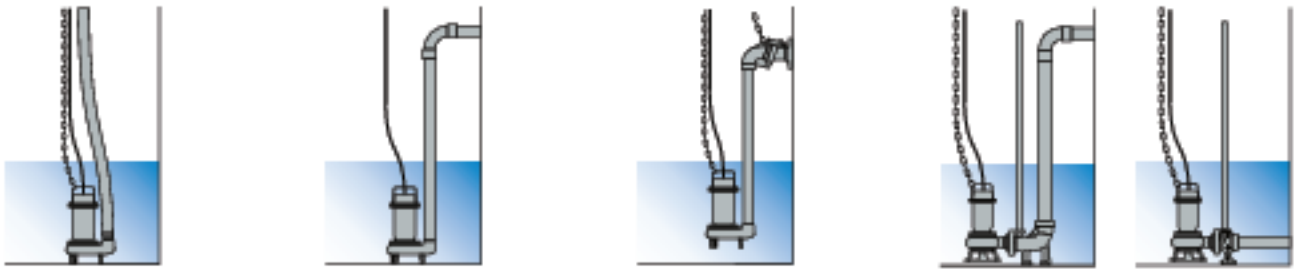

FREE | FIXED | with EXTERNAL COUPLER | with BASE COUPLING FOOT

GRS 2/G40H

Performances

	l/s	0	1	2	3	4
	l/min	0	60	120	180	240
	m³/h	0	3.6	7.2	10.8	14.4
1 GRS 100/2/G40H A0CM(T)5		20.4	18.7	16.8	14.0	7.0

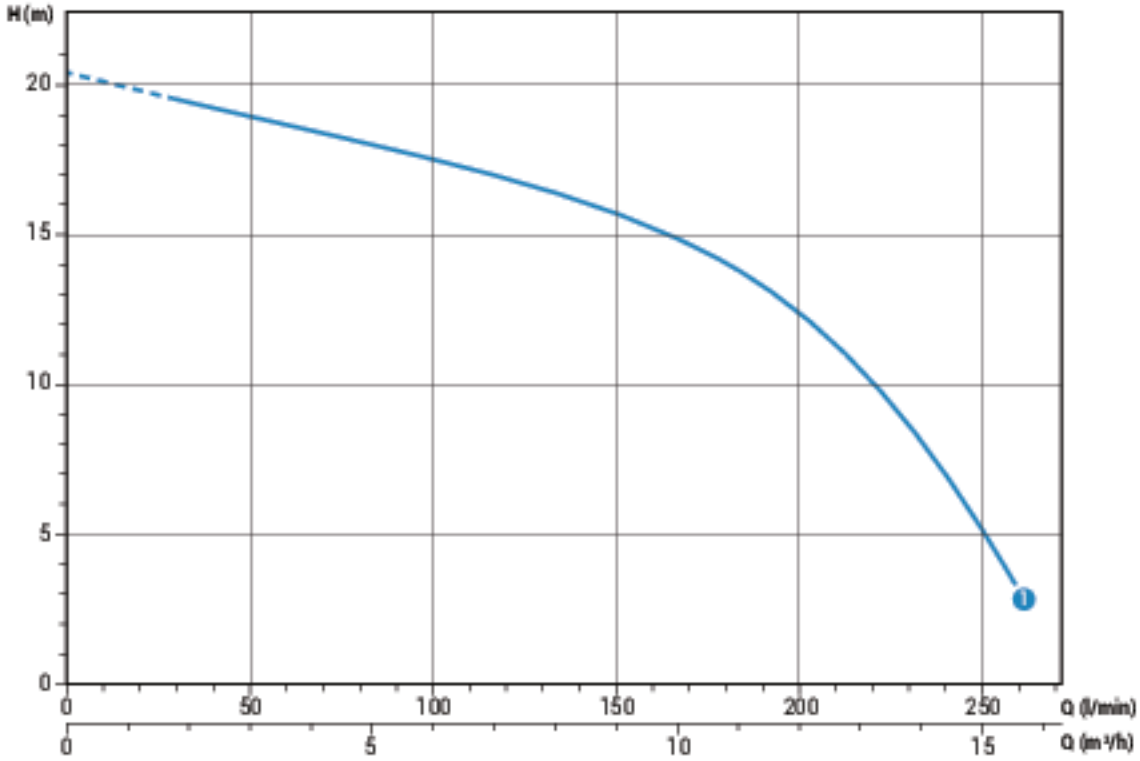

Characteristic curves according to UNI EN ISO 9906

Technical data

	V	Phases	P1 (kW)	P2 (kW)	A	Rpm	Start	Cable	Ø	Free passage
1 GRS 100/2/G40H A0CM5	230	1	-	0.9	6.6	2900	Dir	4G1	G 1½" - DN32	-

	V	Phases	P1 (kW)	P2 (kW)	A	Rpm	Start	Cable	Ø	Free passage
1 GRS 100/2/G40H A0CT5	400	3	-	0.9	2.3	2900	Dir	4G1	G 1½" - DN32	-

Overall dimensions and weights

Models with vertical discharge

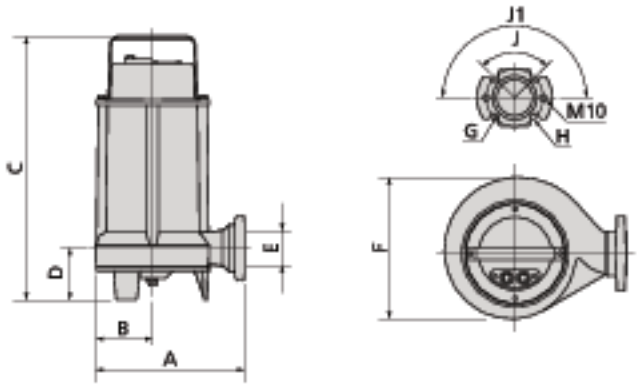

	A	B	C	D	E	F	G	H	J	J1	
GRS 100/2/G40H A0CM(T)5	205	80	365	70	G 1½" DN32	165	14	90	90°	180°	21

Dimensions in mm

Packaging dimension

	X	Y	Z
GRS 100/2/G40H A0CM(T)5	225	385	245

Dimensions in mm

APS

Pumps with high head impeller

Operating ranges

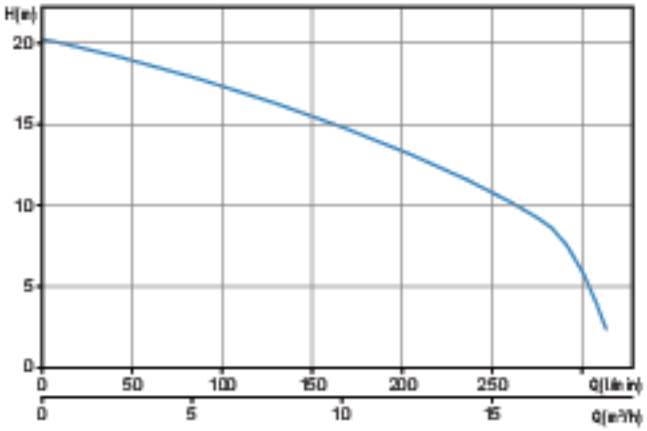

Range characteristics

Motor power	0.37 ÷ 1.5 kW
Poles	2
Insulation class	F
Degree of protection	IP68
Discharge	GAS 1½" DN32 horizontal
Free passage	max 7 mm
Max flow rate	5.2 l/s (312 l/min)
Max head	20.3 m

Motor

Dry motor with thermal protections.

Cable

H07RN-F 4G1 - 5 m cable length. Optional 10 m cable length.

Mechanical seals

One silicon carbide mechanical seal (SiC) and one lip seal (AL).

Applications

Used for clear wastewater, rainwater and seepage containing small amounts of sand. The considerable manometric head makes these units suitable for irrigation and the fish processing sector.

Versions

Electrical variants	TC, TCG (single-phase models) NAE, TRG (three-phase models)
Cooling system	N
Mechanical seals	SICM

Operating specifications

Max operating temperature	40 °C
PH of treated fluid	6 ÷ 14
Viscosity of treated fluid	1 mm²/s
Maximum immersion depth	20 m
Density of treated fluid	1 Kg/dm³
Acoustic pressure max	<70dB
Max starts per hour	30

Construction materials

Case	Cast iron EN-GJL 250
Hydraulic parts	Cast iron EN-GJL 250
Impeller	Cast iron EN-GJL 250
Nuts and bolts	Stainless steel - Class A2-70
Standard gasket	Rubber - NBR
Shaft	Stainless steel - AISI 420
Paint type	Ecological bicomponent epoxy (~ 80 µm)

Installations

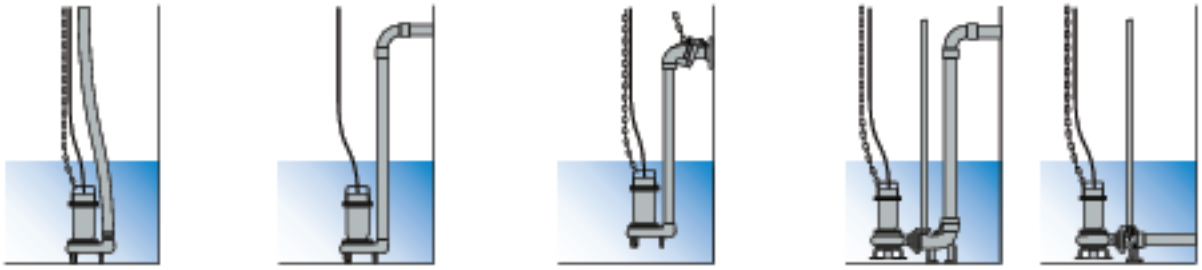

FREE | FIXED | with EXTERNAL COUPLER | with BASE COUPLING FOOT

APS 2/G40H

Performances

	l/s	0	1	2	3	4	5
	l/min	0	60	120	180	240	300
	m³/h	0	3.6	7.2	10.8	14.4	18.0
1 APS 100/2/G40H A0CM(T)5		20.3	18.7	16.7	14.2	11.4	5.8

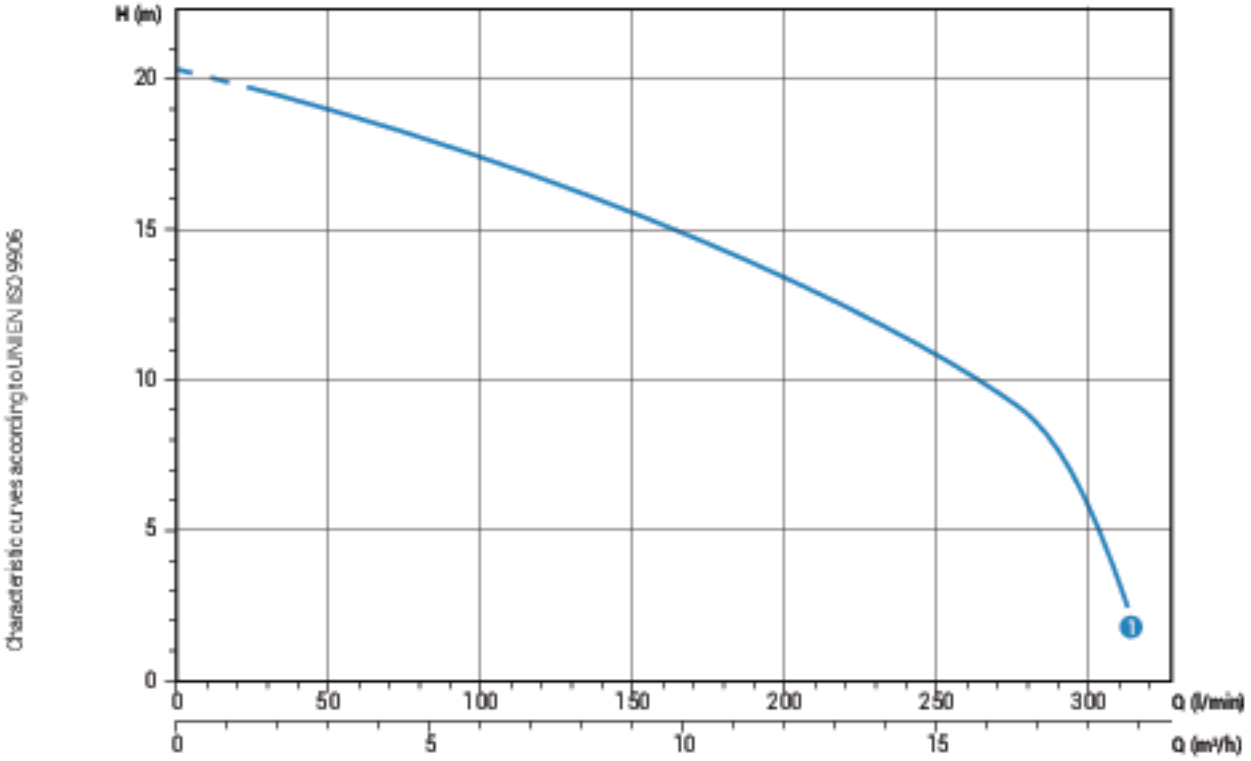

Technical data

	V	Phases	P1(kw)	P2(kw)	A	Rpm	Start	Cable	Ø	Free passage
1 APS 100/2/G40H A0CM5	230	1	-	0.9	6.6	2900	Dir	3G1	G 1½" - DN32	7 mm

	V	Phases	P1(kw)	P2(kw)	A	Rpm	Start	Cable	Ø	Free passage
1 APS 100/2/G40H A0CT5	400	3	-	0.9	2.3	2900	Dir	4G1	G 1½" - DN32	7 mm

APS

Overall dimensions and weights

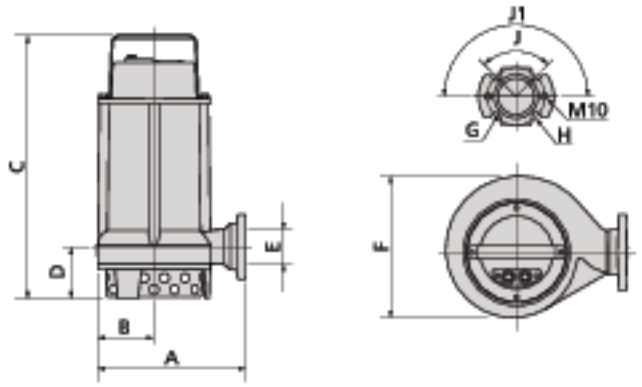

	A	B	C	D	E	F	G	H	J	J1	
APS 100/2/G40H A0C M(T)5	210	80	370	80	G 1½" DN32	165	14	90	90°	180°	20

Dimensions in mm

Packaging dimension

	X	Y	C
APS 100/2/G40H A0C M(T)5	225	385	245

Dimensions in mm

water solutions

All data made available remain non-binding. Zenit reserves the right to make unannounced product changes it deems appropriate

Rev. 0 - 01/01/17